GRIDBar1

High-Performance Linear LED

Integral Driver

GRIDBar1
GRIDBar1

Warnings

- Risk of fire and electrical shock
- Turn off power at breaker
- Installation requires knowledge of electrical systems and should be installed by a qualified electrician. If not qualified, **DO NOT ATTEMPT INSTALLATION**.

Care Instructions

- Wipe with a soft cloth only
- Always avoid using harsh chemicals and/or cleaners

STEP 1 — Attach Mounting Clips

Attach the Mounting Clips (provided) to the GRIDBar1 fixture. Slide the wire through the slot of the clip (if needed) so the wire is centered.

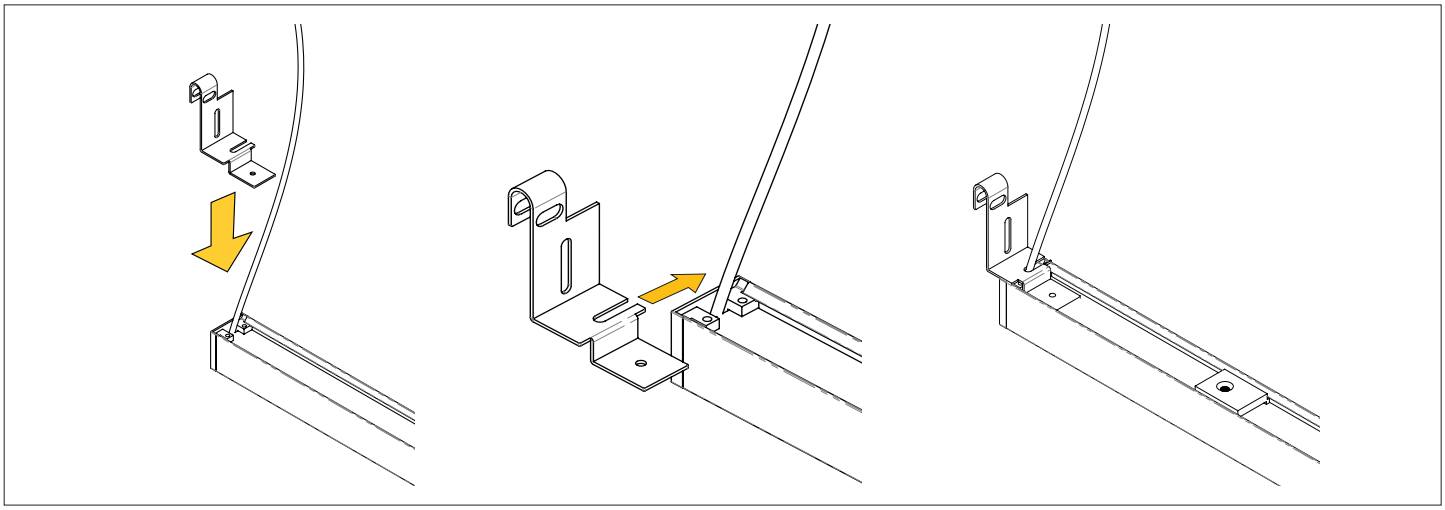

Designed & Built in BOSTON

STEP 2 — Mounting Clip Placement

Slide the threaded bracketa (provided) to each end of the GRIDBar1 fixture until they engage with the Mounting Clips. Fasten with screw (provided).

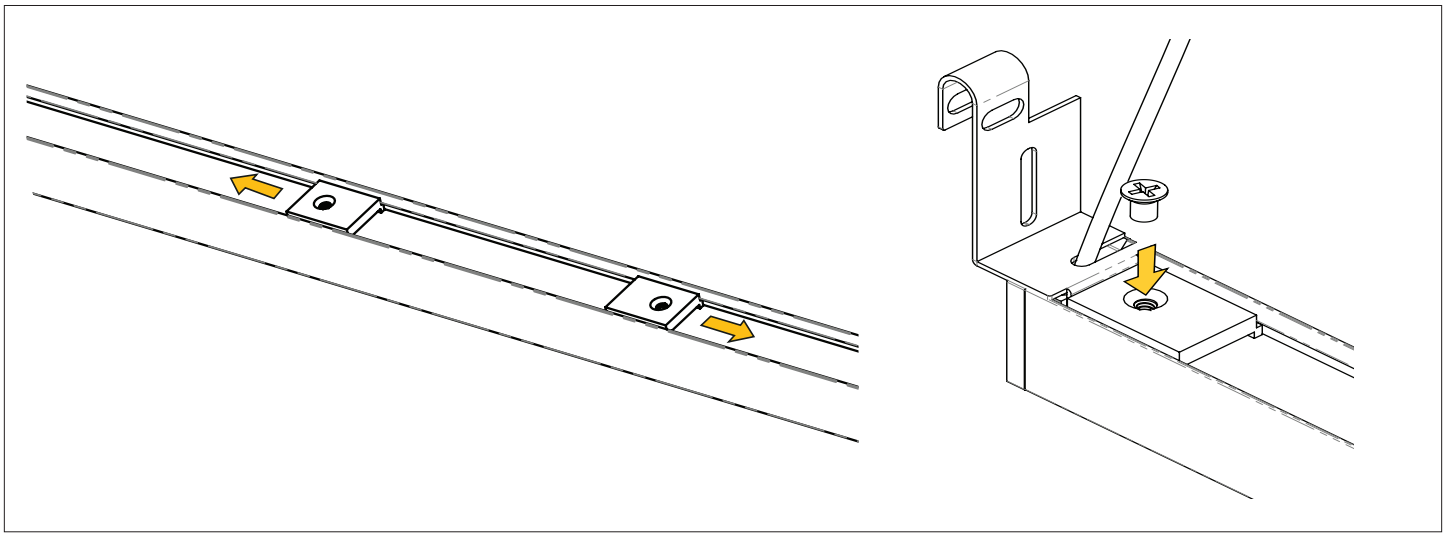

STEP 3 — Fixture Mounting

Place the GRIDBar1 fixture onto the TBar using the Mounting Clips. If needed, secure the Clip to the TBar through the top slot with appropriate hardware on each end of the fixture.

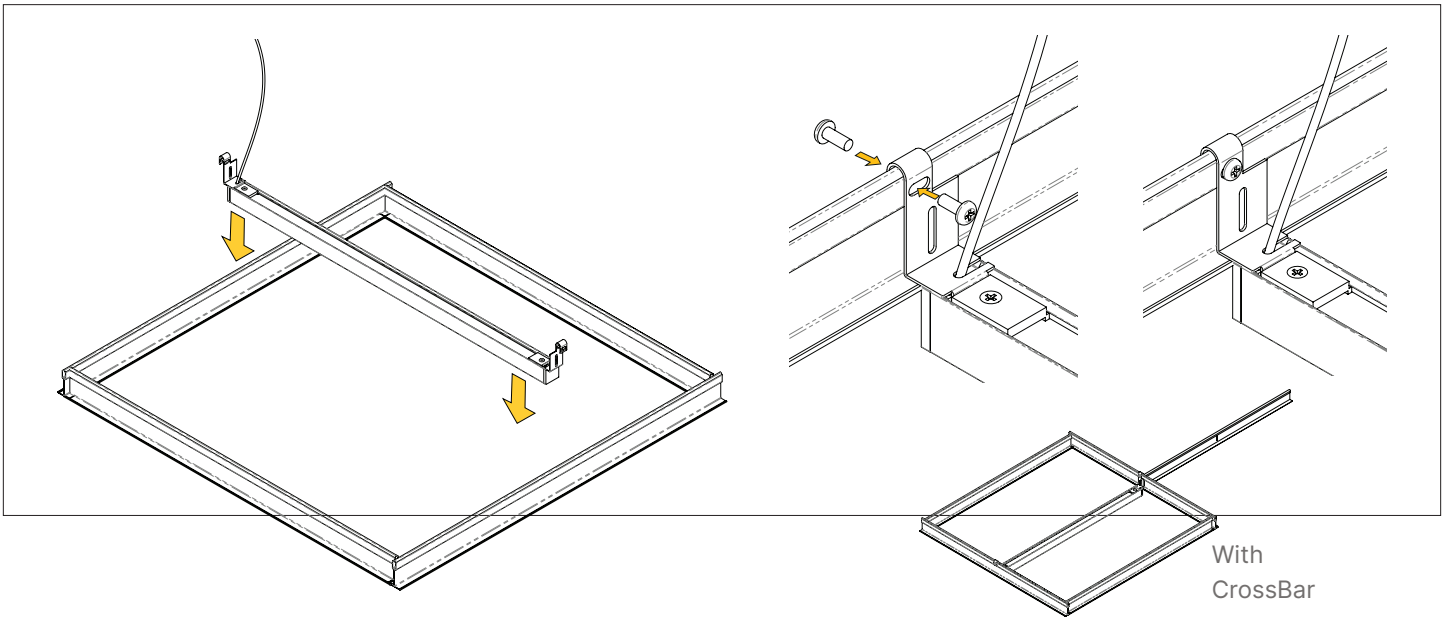

STEP 4 — Install Remote Driver Box

Remote driver box can be located up to 100 feet from fixture. Connect DC Feed from fixture to the driver box (provided by other). Connect AC Feed to the driver box (provided by other). The driver box has 7/8” knock out.

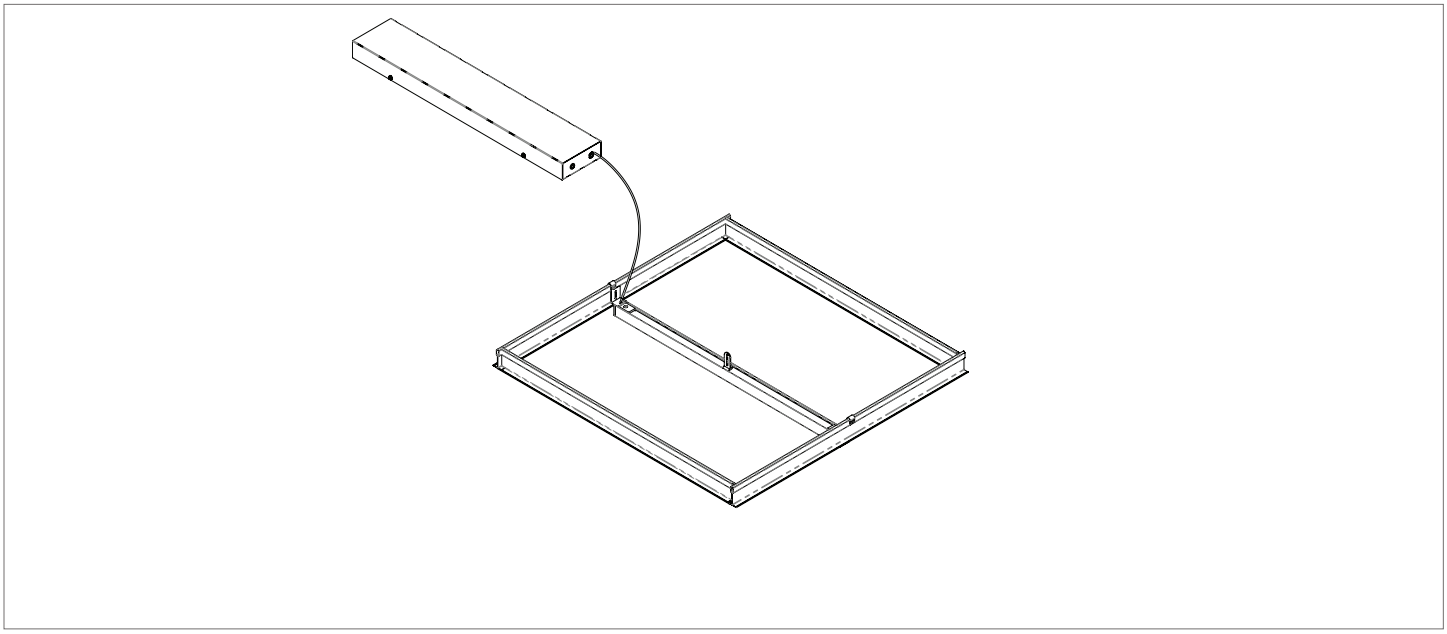

STEP 5 — Install Ceiling Tiles

Install the ceiling tiles on either side of the installed fixture.

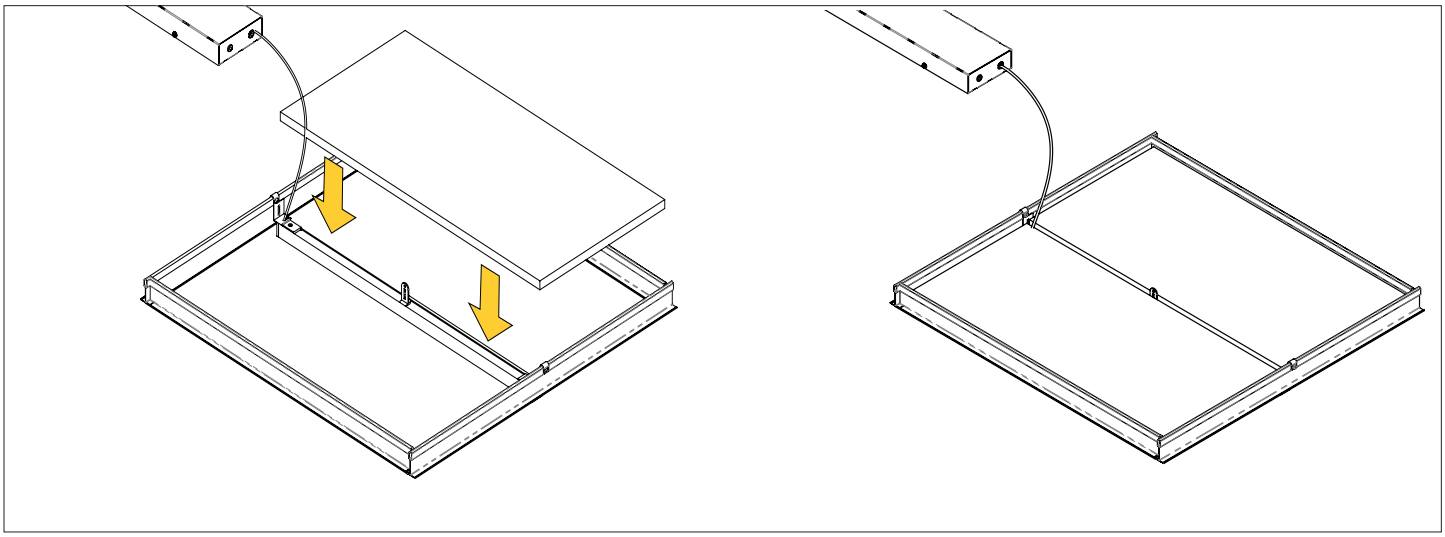

STEP 6 — Complete

Restore Power.

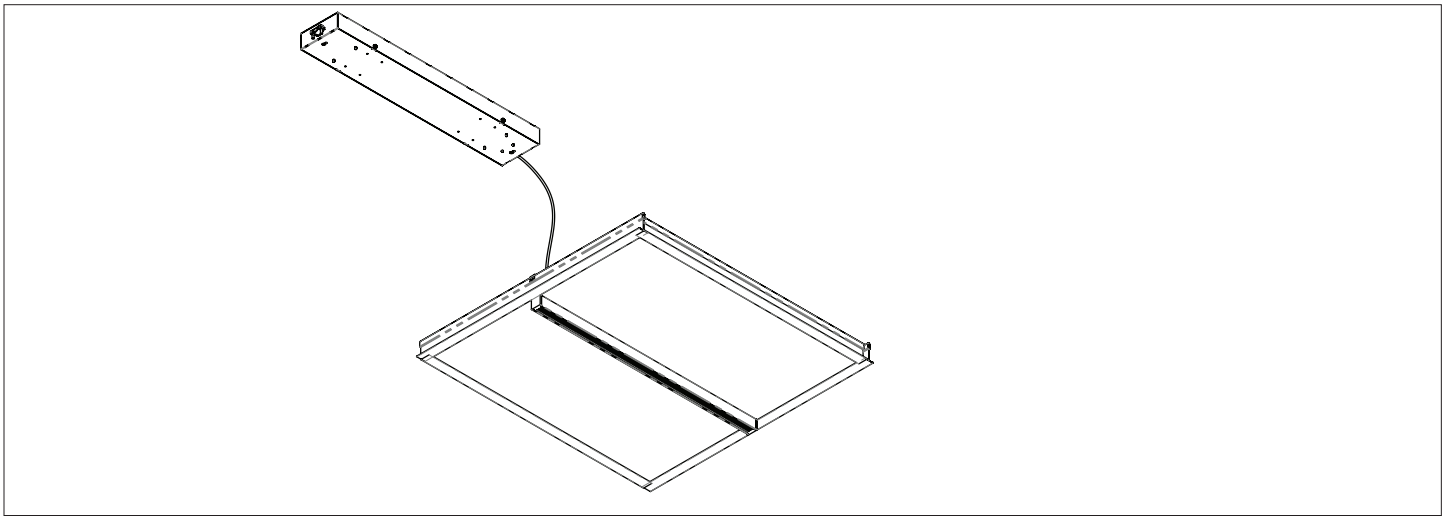

Wiring Guide

Wire the Power Feed End to the J-Box and secure the Canopy to the J-Box or Power Source.

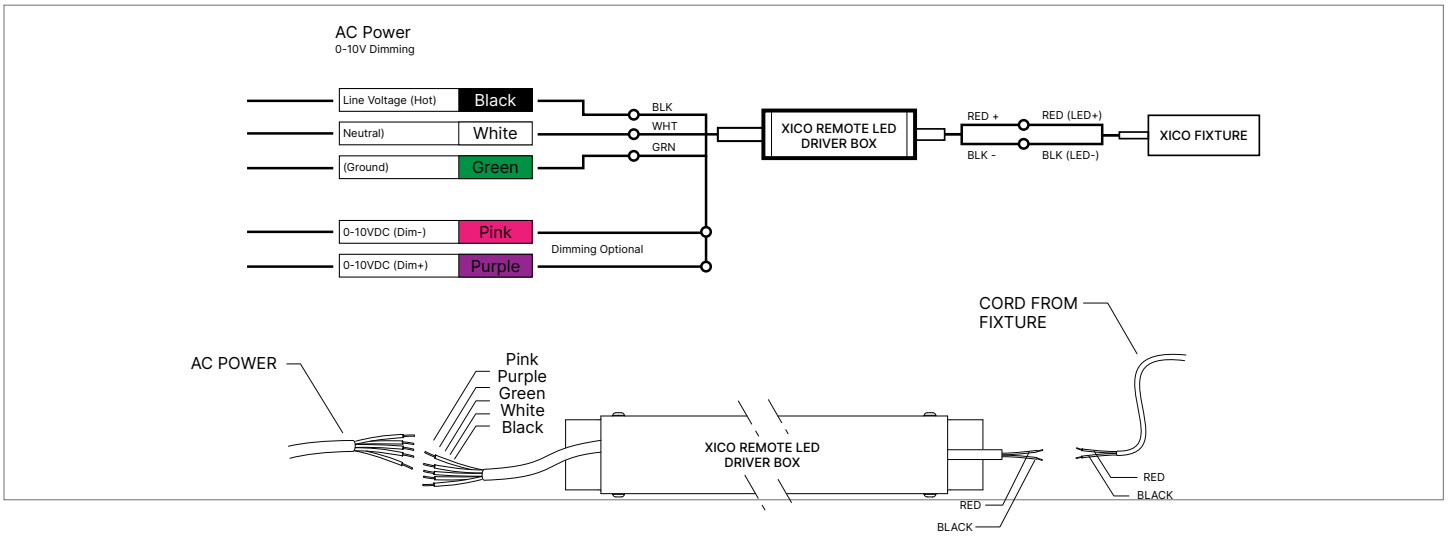

Voltage Drop

24 VDC and Wire Length Chart (Driver to Fixture)

XICO LED Fixture with Remote Drivers

When installing a XICO fixture with a remote driver and the distance is a long way from the fixture, it is important to properly specify the correct wire gauge (AWG/ or thickness of wire) for the distance of wire required. The maximum remote mounting distance is a function of the total voltage-drop across the output of the LED Driver.

How to Use the Chart

Step 1: Calculate the total wattage of the LED lighting system (round up to the nearest 10 W).

Step 2: Find the wattage in the top row and follow the column down to maximum length (round up) of wiring between the LEDs and the power supply.

Step 3: Look to the left column for the wire gauge size required to prevent voltage drop over 3%.

Maximum Cable Length from Remote Driver to Fixture — 24 VDC Driver										
Wire Gauge	Total Fixture Wattage (W)									
	10 W	20 W	30 W	40 W	50 W	60 W	70 W	80 W	90 W	100 W
18 AWG	134 ft	68 ft	45 ft	33 ft	27 ft	22 ft	19 ft	17 ft	15 ft	14 ft
16 AWG	215 ft	109 ft	72 ft	54 ft	43 ft	36 ft	31 ft	27 ft	24 ft	22 ft
14 AWG	345 ft	174 ft	115 ft	86 ft	69 ft	57 ft	49 ft	43 ft	39 ft	36 ft
12 AWG	539 ft	272 ft	181 ft	135 ft	108 ft	90 ft	77 ft	68 ft	62 ft	56 ft
10 AWG	784 ft	397 ft	263 ft	197 ft	158 ft	131 ft	112 ft	98 ft	95 ft	82 ft

Remote Driver to Fixture Example

Calculate total load

An 8 ft fixture using 4 W/ft requires a total of 32 W. Round up to the nearest load of 40 W.

Find distance from driver to Load

Let's assume the distance is 40 ft from the driver to the fixture. Round up to the nearest distance of 54 ft.

Choose wire gauge

It's recommended to install 16 AWG wire between the driver and fixture to eliminate noticeable voltage drop.

Designed & Built in BOSTON

Declare

Red List Free